Maths Mock Test Paper 15

Name: _____ Date: _____

Time allowed: **50 minutes** **50 questions**, 1 mark each

Answer **every** question. Each question has five options, **A** to **E**, and exactly one is correct. Work out the answer and mark the letter you have chosen. Marks are not taken away for a wrong answer, so it is worth having a go at every question. **Calculators and rulers are not allowed.**

Q1. Which of these numbers rounds to 8,000 when rounded to the nearest 1,000?

A. 7,382 *B.* 7,501 *C.* 8,500 *D.* 8,623 *E.* 9,001

Q2. A counter sits on −5 on a number line and is moved 3 places to the left. Which number does it land on?

A. −15 *B.* −8 *C.* −2 *D.* 2 *E.* 8

Q3. Which word best describes the chance of getting a head when a fair coin is flipped?

A. Impossible

B. Unlikely

C. Even chance

D. Likely

E. Certain

Q4. Which of these is the same as 3/4 of a kilogram?

A. 34 g *B.* 75 g *C.* 340 g *D.* 750 g *E.* 7,500 g

Q5. What is 3:45 pm on a 24-hour clock?

A. 03:45 *B.* 13:45 *C.* 14:45 *D.* 15:45 *E.* 17:45

myfreeschool

Q6. Which of these is the most sensible speed for a person walking?

A. 5 km/h *B.* 25 km/h *C.* 50 km/h *D.* 100 km/h *E.* 500 km/h

Q7. For every 4 sweets Tom is given, Sam is given 1 sweet. Tom is given 20 sweets. How many sweets is Sam given?

A. 4 *B.* 5 *C.* 16 *D.* 24 *E.* 80

Q8. Which expression means the same as n + n + n?

A. 3n *B.* n + 3 *C.* 3 + 3n *D.* n × n × n *E.* n + 2

Q9. Which of these points is nearest to the origin?

A. (0, 3) *B.* (4, 0) *C.* (0, −5) *D.* (−6, 0) *E.* (7, 0)

Q10. There are 24 pencils shared equally between 4 pots. Two of the pots are emptied. How many pencils are left in the pots?

A. 6 *B.* 8 *C.* 12 *D.* 16 *E.* 18

Q11. Two squares, each with sides of 5 cm, are joined edge to edge to make a rectangle. What is the perimeter of that rectangle?

A. 20 cm *B.* 25 cm *C.* 30 cm *D.* 40 cm *E.* 50 cm

Q12. Round 99.97 to 1 decimal place.

A. 99.9 *B.* 99.97 *C.* 99.99 *D.* 100.0 *E.* 100.1

myfreeschool

Q13. The two-way table shows the pets owned by two classes. How many Year 6 pupils own a pet?

Pupils	Dog	Cat	No pet
Year 5	11	9	5
Year 6	13	7	5

A. 20 *B.* 22 *C.* 24 *D.* 25 *E.* 30

Q14. A coach travels 231 km in 3 hours. What is its average speed?

A. 67 km/h *B.* 70 km/h *C.* 74 km/h *D.* 77 km/h *E.* 81 km/h

Q15. A shirt costing £40 is reduced by 20% in a sale. The following week the sale price is reduced by a further 10%. What does the shirt cost now?

A. £26.00 *B.* £28.00 *C.* £28.80 *D.* £29.00 *E.* £30.00

Q16. The point (−4, 2) is reflected in the x-axis. What are the coordinates of its image?

A. (4, 2) *B.* (4, −2) *C.* (−4, −2) *D.* (−2, 4) *E.* (2, −4)

myfreeschool

Q17. These three angles meet at a point. Work out the size of angle x.

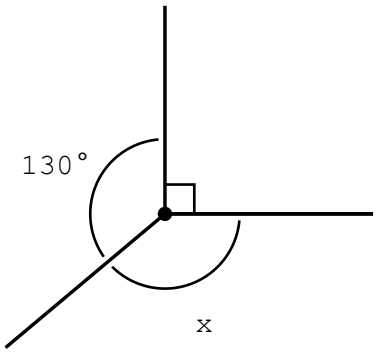

A. 120° *B.* 130° *C.* 140° *D.* 150° *E.* 160°

Q18. Two numbers multiply together to give −24 and add together to give 2. Which pair are they?

A. −6 and 4 *B.* 6 and −4 *C.* −8 and 3 *D.* 8 and −3 *E.* −12 and 2

Q19. A map uses a scale of 1 cm to 2.5 km. Two villages are 6 cm apart on the map. What is the real distance between them?

A. 8.5 km *B.* 12 km *C.* 15 km *D.* 18 km *E.* 24 km

Q20. How is four thousand and six point five written in figures?

A. 406.5 *B.* 4,006.5 *C.* 4,060.5 *D.* 4,065 *E.* 4,600.5

Q21. What is 3.6 ÷ 4?

A. 0.09 *B.* 0.9 *C.* 1.4 *D.* 9 *E.* 14.4

myfreeschool

Q22. A shop sells notebooks at £4 each. A graph of cost against the number of notebooks is drawn. Which is true?

A. The line is flat

B. The line starts at (0, 4)

C. The line goes down to the right

D. The line is straight and starts at the origin

E. The line is curved

Q23. Ben says that every prime number is odd. Which number shows that he is wrong?

A. 1 *B.* 2 *C.* 9 *D.* 15 *E.* 21

Q24. A triangle has a base of 18 cm and a height of 9 cm. What is its area?

A. 27 cm² *B.* 54 cm² *C.* 81 cm² *D.* 162 cm² *E.* 324 cm²

Q25. A train journey is timetabled to take 1 hour 50 minutes. The train leaves late, at 14:35, and makes up 10 minutes along the way. At what time does it arrive?

A. 16:05 *B.* 16:15 *C.* 16:25 *D.* 16:35 *E.* 16:45

Q26. What is the nth term rule for this sequence?

4, 7, 10, 13

A. n + 3 *B.* 3n *C.* 3n + 1 *D.* 4n − 1 *E.* n + 4

Q27. Round 9,650 to 2 significant figures.

A. 9,600 *B.* 9,650 *C.* 9,660 *D.* 9,700 *E.* 10,000

myfreeschool

Q28. A jug holds 1.5 litres of water. Glasses holding 200 ml each are filled from it until there is not enough left for another. How much water is left in the jug?

A. 50 ml *B.* 100 ml *C.* 150 ml *D.* 200 ml *E.* 300 ml

Q29. What is the order of rotational symmetry of this equilateral triangle?

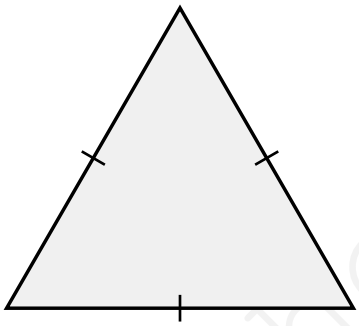

A. 1 *B.* 2 *C.* 3 *D.* 4 *E.* 6

Q30. A train leaves at 09:45 and the journey takes 1 hour 20 minutes. At what time does it arrive?

A. 10:55 *B.* 11:05 *C.* 11:15 *D.* 11:25 *E.* 11:45

Q31. Which of these pairs of numbers has a difference of 10?

A. −4 and 5 *B.* −7 and 2 *C.* −3 and 7 *D.* −6 and 3 *E.* −8 and 1

Q32. The ratio of Tom's age to Sara's age is 4 : 7. Sara is 28 years old. How old is Tom?

A. 11 *B.* 14 *C.* 16 *D.* 18 *E.* 21

myfreeschool

Q33. The bar chart shows the drinks sold in a café one morning. How many juices were sold?

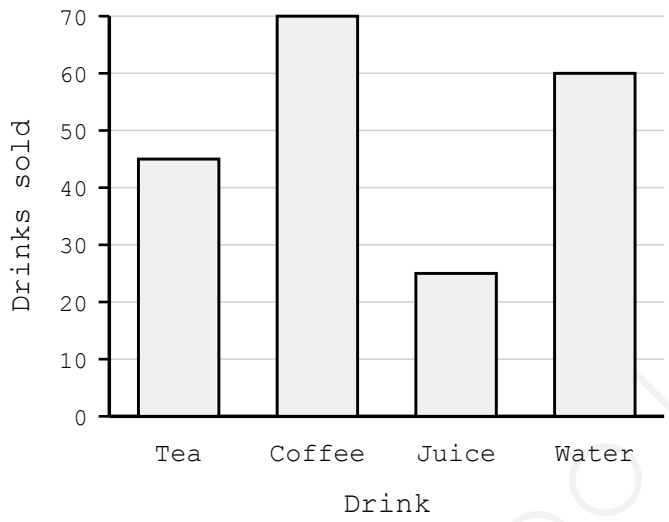

A. 15 *B.* 20 *C.* 25 *D.* 45 *E.* 60

Q34. A bag of apples weighs 1.2 kg. What do six of these bags weigh, in grams?

A. 7.2 g *B.* 720 g *C.* 1,800 g *D.* 7,200 g *E.* 72,000 g

Q35. A train leaves at 07:50 and arrives at 10:05, having travelled 180 km. What is its average speed?

A. 60 km/h *B.* 70 km/h *C.* 75 km/h *D.* 80 km/h *E.* 90 km/h

Q36. A diver at −8 m descends at 3 m every minute. Where is she after 6 minutes?

A. −34 m *B.* −26 m *C.* −18 m *D.* 10 m *E.* 26 m

Q37. A bag holds 4 green counters and 6 yellow counters. Two counters are taken out, one after the other, without being put back. What is the probability that both are green?

A. 2/15 *B.* 4/25 *C.* 1/6 *D.* 1/5 *E.* 4/15

myfreeschool

Q38. Lessons last 45 minutes with a 5 minute change-over between them. The first starts at 09:00. What time does the fourth lesson end?

A. 11:15 *B.* 11:45 *C.* 12:00 *D.* 12:05 *E.* 12:15

Q39. What is the smallest number above 100 that has 2, 3 and 5 all as factors?

A. 105 *B.* 110 *C.* 120 *D.* 130 *E.* 150

Q40. 45% of a number is 27. What is 80% of the same number?

A. 36 *B.* 42 *C.* 48 *D.* 54 *E.* 55

Q41. A cuboid measures 8 cm by 3 cm by 2 cm. What is its total surface area?

A. 46 cm^2 *B.* 48 cm^2 *C.* 76 cm^2 *D.* 92 cm^2 *E.* 184 cm^2

Q42. A number rounds to 4,600 when rounded to the nearest 100, and to 5,000 when rounded to the nearest 1,000. Which of these could the number be?

A. 4,499 *B.* 4,540 *C.* 4,610 *D.* 4,651 *E.* 4,700

Q43. Simplify this expression.

$$6x + 2(x - 5)$$

A. $8x - 10$ *B.* $8x + 10$ *C.* $8x - 5$ *D.* $6x - 10$ *E.* $4x - 10$

Q44. What is half of 3.6 added to double 1.7?

A. 5 *B.* 5.2 *C.* 5.4 *D.* 6.2 *E.* 7

myfreeschool

Q45. Estimate 897 × 302 by rounding each number to 1 significant figure.

A. 240,000 *B.* 270,000 *C.* 271,000 *D.* 280,000 *E.* 300,000

Q46. A 150 km journey is timetabled to take 2 hours 30 minutes. How much time would be saved by travelling the whole way at 75 km/h?

A. 15 minutes

B. 20 minutes

C. 30 minutes

D. 45 minutes

E. 1 hour

Q47. A regular polygon has an exterior angle of 24°. How many sides does it have?

A. 9 *B.* 12 *C.* 15 *D.* 18 *E.* 24

Q48. Triangle ABC has A at (2, 1). It is reflected in the y-axis and the image is then translated 3 squares down. Where is the image of A?

A. (2, −2) *B.* (−2, 4) *C.* (−2, 2) *D.* (−2, −2) *E.* (−5, 1)

Q49. A walker covers 9 km in 1 hour 30 minutes. What is the average speed in kilometres per hour?

A. 4.5 km/h *B.* 5 km/h *C.* 6 km/h *D.* 7.5 km/h *E.* 13.5 km/h

Q50. A shop sells pens in packs of three for £2.10, or singly for 80p each. How much is saved by buying 12 pens in packs rather than singly?

A. £0.60 *B.* £1.20 *C.* £1.80 *D.* £2.40 *E.* £3.60

myfreeschool