Maths Mock Test Paper 14

Name: _____ Date: _____

Time allowed: **50 minutes** **50 questions**, 1 mark each

Answer **every** question. Each question has five options, **A** to **E**, and exactly one is correct. Work out the answer and mark the letter you have chosen. Marks are not taken away for a wrong answer, so it is worth having a go at every question. **Calculators and rulers are not allowed.**

Q1. Priya plots the point (0, 6) on a grid. Where does this point lie?

A. On the x-axis

B. On the y-axis

C. Six squares to the right of the origin

D. At the origin

E. Halfway between the two axes

Q2. On a school trip the ratio of teachers to children is 1 : 6. There are 4 teachers. How many children are there?

A. 10 *B.* 18 *C.* 20 *D.* 24 *E.* 28

Q3. Which of these statements is always true?

A. The sum of two odd numbers is odd

B. The sum of two even numbers is even

C. The product of two odd numbers is even

D. Every multiple of 3 is odd

E. Every square number is even

Q4. What is 25% written as a fraction in its simplest form?

A. 1/2 *B.* 1/3 *C.* 1/4 *D.* 1/5 *E.* 2/5

myfreeschool

Q5. A lift is at floor −2. Which floor does it reach if it goes up 5 floors?

A. Floor −7 *B.* Floor −3 *C.* Floor 2 *D.* Floor 3 *E.* Floor 7

Q6. What is 0.4 multiplied by 10?

A. 4 *B.* 0.04 *C.* 40 *D.* 0.004 *E.* 0.44

Q7. Four of these numbers round to 60 when rounded to the nearest 10. Which one does not?

A. 55 *B.* 58 *C.* 61 *D.* 64 *E.* 65

Q8. Use the swimming pool timetable. How long is the gap between the end of Beginners and the start of Improvers?

Session	Starts	Ends
Beginners	09:30	10:15
Improvers	10:30	11:25
Diving	11:40	12:20
Family	13:00	14:30

A. 10 minutes

B. 15 minutes

C. 20 minutes

D. 25 minutes

E. 30 minutes

myfreeschool

Q9. A packet holds 6 cakes. Mrs Shah needs 27 cakes for a party. Which calculation tells her how many packets to buy?

A. 27 × 6

B. 27 + 6

C. 27 − 6

D. 27 ÷ 6, rounded up to the next whole number

E. 6 ÷ 27

Q10. The pictogram shows the colours of cars in a car park. How many blue cars are there?

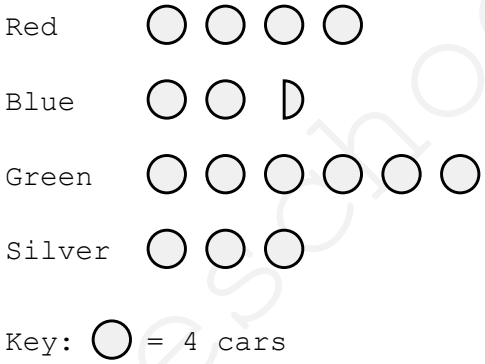

A. 8 *B.* 10 *C.* 12 *D.* 16 *E.* 24

Q11. A sequence starts 5, 11, 17, 23. Ben says that every term of this sequence is odd. Why is he right?

A. The first term is odd and the step of 6 is even, so every term stays odd

B. The first term is odd, so all the terms after it must be odd whatever the step

C. The terms are all prime numbers, and prime numbers are odd

D. The step is 6, and 6 is a multiple of 3

E. Every sixth number counted from 5 is odd

myfreeschool

Q12. What is the median of this set of numbers?

12, 7, 19, 5, 14, 9

A. 9 *B.* 10.5 *C.* 11 *D.* 11.5 *E.* 12

Q13. These three angles meet at a point. Work out the size of angle x.

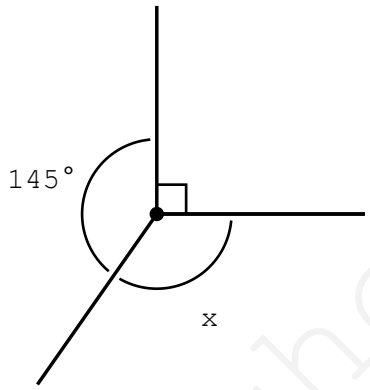

A. 95° *B.* 105° *C.* 115° *D.* 125° *E.* 135°

Q14. Sam says 250 cm is the same as 2.5 m. Priya says it is the same as 2,500 mm. Who is right?

A. Only Sam

B. Only Priya

C. Both of them

D. Neither of them

E. Sam is right, but only for lengths under 1 m

Q15. Which number is exactly halfway between −14 and 6?

A. −10 *B.* −8 *C.* −4 *D.* −2 *E.* 4

myfreeschool

Q16. Use the flight timetable. Which flight has the shortest journey time?

Flight	Departs	Arrives
BA210	07:15	09:50
BA340	10:30	13:20
BA455	15:05	17:35

A. BA210

B. BA340

C. BA210 and BA455 are equal

D. They are all the same

E. BA455

Q17. Which of these is NOT equivalent to the ratio 12 : 18?

A. 2 : 3 *B.* 6 : 9 *C.* 4 : 6 *D.* 24 : 36 *E.* 3 : 4

Q18. Estimate 2.9^3 by rounding 2.9 to the nearest whole number. (2.9^3 means $2.9 \times 2.9 \times 2.9$)

A. 21 *B.* 24 *C.* 24.389 *D.* 27 *E.* 30

Q19. Three friends share a restaurant bill of £42 equally, and then each of them adds a £2 tip. How much does each friend pay altogether?

A. £14 *B.* £15 *C.* £16 *D.* £17 *E.* £18

Q20. A car drives at a steady 60 km/h for 2 hours 45 minutes. How far does it travel?

A. 120 km *B.* 135 km *C.* 150 km *D.* 165 km *E.* 180 km

myfreeschool

Q21. A square tile has sides of 15 cm. How many of these tiles are needed to cover a wall measuring 1.5 m by 1.2 m?

A. 60 *B.* 72 *C.* 80 *D.* 96 *E.* 120

Q22. Estimate 7.95 × 8.1 by rounding each number to the nearest whole number.

A. 56 *B.* 63 *C.* 64 *D.* 64.395 *E.* 72

Q23. Which of these lines is horizontal?

A. x = 4 *B.* y = 4 *C.* y = x *D.* y = 4x *E.* y = x + 4

Q24. Tom finds 15% of £60 by working out 10%, halving that, and adding the two together. He gets £9. What can be said about his work?

A. He is right, and the method works for any percentage that is a multiple of 5

B. He is wrong: the answer is £6

C. He is wrong: the answer is £12

D. He is wrong: the answer is £15

E. He is right, but only because 60 is a multiple of 10

Q25. In the number 5.282, what is the difference in value between the two 2s?

A. 0.2 *B.* 0.198 *C.* 0.002 *D.* 0.18 *E.* 1.98

Q26. Solve for n.

$$9 = 4n - 3$$

A. 2 *B.* 3 *C.* 4 *D.* 6 *E.* 12

myfreeschool

Q27. The line graph shows how many children came to swimming club each week. In how many weeks did more than 30 children come?

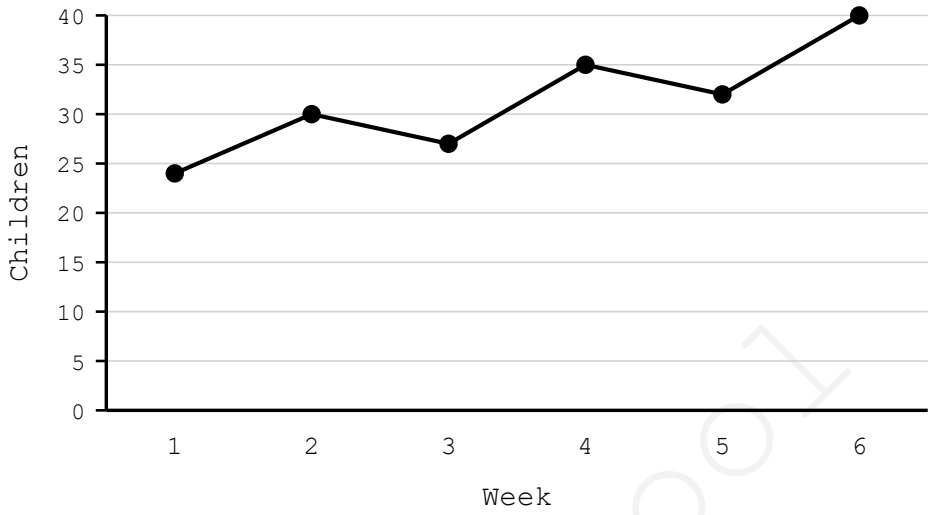

A. 1 *B.* 2 *C.* 3 *D.* 4 *E.* 5

Q28. A whole number leaves a remainder of 1 when it is divided by 4, and also a remainder of 1 when it is divided by 6. Which of these could the number be?

A. 13 *B.* 16 *C.* 20 *D.* 22 *E.* 27

Q29. What is 1.75 m − 90 cm, written in centimetres?

A. 75 cm *B.* 85 cm *C.* 95 cm *D.* 165 cm *E.* 185 cm

Q30. Which of these calculations has a different answer from the other four?

A. 25 × 8 *B.* 50 × 4 *C.* 10 × 20 *D.* 40 × 5 *E.* 12 × 15

myfreeschool

Q31. Which quadrilateral has diagonals that are equal in length AND cross at right angles?

A. Rectangle

B. Rhombus

C. Square

D. Kite

E. Parallelogram

Q32. What is 12 + (−20)?

A. −32 *B.* −8 *C.* 8 *D.* 12 *E.* 32

Q33. Which of these is the best mental method for finding 75% of 48?

A. Divide by 4, then multiply by 3

B. Divide by 3, then multiply by 4

C. Multiply by 75

D. Divide by 75

E. Halve it, then subtract 4

Q34. A clock shows 00:35. What is this time using am or pm?

A. 10:35 am *B.* 10:35 pm *C.* 11:35 pm *D.* 12:35 am *E.* 12:35 pm

Q35. Squash is mixed with water in the ratio 1 : 5. Jo uses 300 ml of squash. How much drink does she make altogether?

A. 350 ml *B.* 1,200 ml *C.* 1,500 ml *D.* 1,800 ml *E.* 3,000 ml

myfreeschool

Q36. The line graph shows how far a car had travelled during an afternoon. What was its average speed between 2 pm and 4 pm?

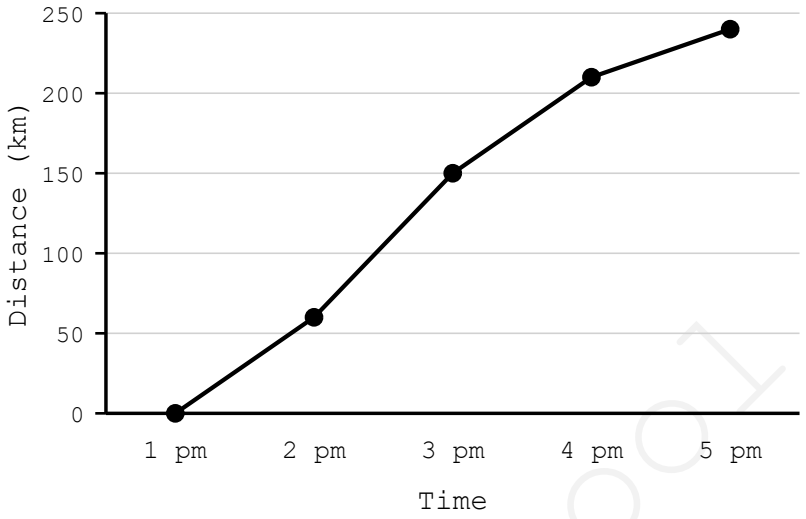

A. 45 km/h *B.* 60 km/h *C.* 75 km/h *D.* 90 km/h *E.* 105 km/h

Q37. A number is doubled and then 7 is subtracted. The result is the same as the number with 3 added to it. What is the number?

A. 4 *B.* 5 *C.* 10 *D.* 12 *E.* 17

Q38. A cyclist rides 12 km at a steady 24 km/h and then rests for 15 minutes. How long is it from setting off to the end of the rest?

A. 30 minutes

B. 37 minutes

C. 45 minutes

D. 50 minutes

E. 1 hour 15 minutes

myfreeschool

Q39. Work out the value of x.

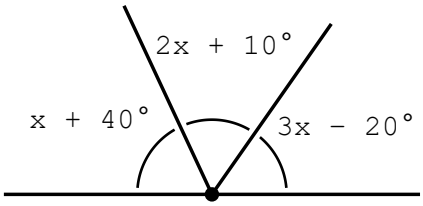

A. 15° *B.* 20° *C.* 25° *D.* 30° *E.* 35°

Q40. A room measures 5 m by 4 m. Carpet costs £18 per square metre and fitting costs a further £45. What is the total cost?

A. £360 *B.* £380 *C.* £405 *D.* £420 *E.* £450

Q41. A number has exactly four factors, and two of them are 3 and 5. What is the number?

A. 15 *B.* 30 *C.* 45 *D.* 60 *E.* 75

Q42. A night shift runs from 21:45 to 06:15 the next morning. How long is the shift?

A. 7 hours 30 minutes

B. 8 hours

C. 8 hours 30 minutes

D. 9 hours

E. 9 hours 30 minutes

myfreeschool

Q43. Which is the larger number, 5/8 or 0.6, and what is the difference between them?

A. 5/8, by 0.025

B. 0.6, by 0.025

C. 5/8, by 0.25

D. 0.6, by 0.25

E. Neither: they are equal

Q44. A field is a 20 m by 12 m rectangle with an 8 m by 5 m rectangle removed from one corner. What is its area?

A. 160 m² *B.* 185 m² *C.* 200 m² *D.* 215 m² *E.* 240 m²

Q45. The cost of hiring a boat is given by C = 3h + 5, where h is the number of hours. What does the 5 stand for?

A. The cost of each hour

B. The number of hours allowed

C. The cost of 5 hours

D. The total cost

E. A fixed charge before any hours are counted

Q46. On a number line, point A is at −6 and point B is at 10. Which number lies three quarters of the way along from A to B?

A. −2 *B.* 2 *C.* 4 *D.* 6 *E.* 8

Q47. £700 is shared between Ann, Bob and Cal so that Ann gets twice as much as Bob, and Bob gets three times as much as Cal. How much does Ann receive?

A. £70 *B.* £140 *C.* £210 *D.* £350 *E.* £420

myfreeschool

Q48. Which number equals 8 tenths + 3 hundredths + 4 thousandths?

A. 0.834 *B.* 0.384 *C.* 0.804 *D.* 0.843 *E.* 8.34

Q49. A box holds 999 paper clips. How many paper clips are there in 7 boxes?

A. 6,293 *B.* 6,933 *C.* 6,993 *D.* 7,000 *E.* 7,063

Q50. A 12 m rope is cut into pieces each 80 cm long. How many pieces are there?

A. 12 *B.* 14 *C.* 15 *D.* 16 *E.* 18

myfreeschool