Maths Mock Test Paper 10

Name: _____ Date: _____

Time allowed: 50 minutes 50 questions, 1 mark each

Answer every question. Each question has five options, A to E, and exactly one is correct. Work out the answer and mark the letter you have chosen. Marks are not taken away for a wrong answer, so it is worth having a go at every question. Calculators and rulers are not allowed.

Q1. Nina eats 1/4 of a cake and Sam eats 1/5 of the same cake. Who eats more?

A. Sam, because 5 is bigger than 4

B. Sam, because a fifth is bigger than a quarter

C. They eat exactly the same amount

D. It cannot be decided without knowing the size of the cake

E. Nina, because a quarter is bigger than a fifth

Q2. What is double 45?

A. 80 B. 85 C. 90 D. 95 E. 100

Q3. What is the missing number in this sequence?

7, 11, ?, 19

A. 12 B. 13 C. 14 D. 15 E. 16

Q4. Which of these is the most sensible estimate for the mass of a full 2 litre bottle of water?

A. 2 g B. 20 g C. 200 g D. 20 kg E. 2 kg

myfreeschool

Q5. A cuboid measures 6 cm by 3 cm by 2 cm. What is its volume?

A. 11 cm^3 B. 18 cm^3 C. 22 cm^3 D. 36 cm^3 E. 72 cm^3

Q6. Sweets are shared between Anna and Ben in the ratio 3 : 5. Ben gets 20 sweets. How many sweets does Anna get?

A. 15 B. 12 C. 20 D. 32 E. 8

Q7. The pie chart shows the favourite drinks of a class. Which drink was chosen by exactly half of the class?

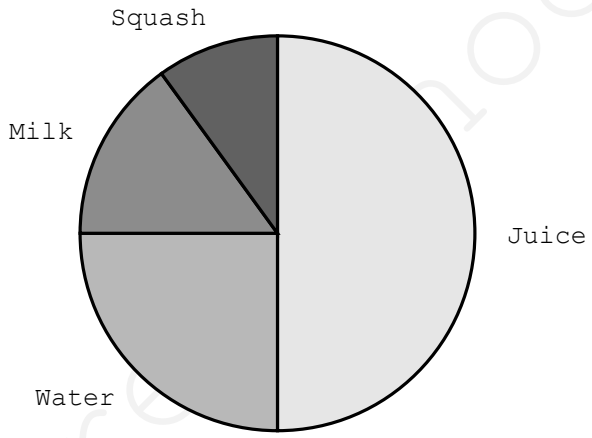

A. Water

B. Milk

C. Squash

D. Juice

E. No drink was chosen by half

myfreeschool

Q8. Ella says that every number ending in 5 is a multiple of 5. Is she right?

A. No, because 15 is not a multiple of 5

B. No, because multiples of 5 must be even

C. Yes, but only for numbers below 100

D. No, because multiples of 5 can only end in 0

E. Yes, because a number ending in 5 always divides exactly by 5

Q9. These three angles meet at a point. Work out the size of angle x.

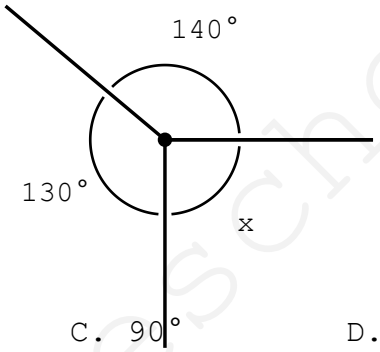

A. 70° B. 80° C. 90° D. 100° E. 110°

Q10. Which of these numbers rounds to 70 when rounded to the nearest 10?

A. 62 B. 64 C. 73 D. 75 E. 78

Q11. A rectangle has a length of 13 cm and a width of 9 cm. What is its perimeter?

A. 22 cm B. 31 cm C. 40 cm D. 44 cm E. 117 cm

Q12. A coat costs £80. In a sale its price falls by 25%. After the sale the new price is raised by 25%. What is the price now?

A. £80 B. £75 C. £70 D. £72 E. £85

myfreeschool

Q13. What is half of 850?

A. 405 B. 415 C. 420 D. 425 E. 435

Q14. Which of these statements about a parallelogram is NOT always true?

A. Opposite sides are parallel

B. Opposite angles are equal

C. The four angles add to 360°

D. Opposite sides are the same length

E. All four sides are the same length

Q15. Use the ferry timetable. Maya reaches the harbour at 11:20. How long must she wait for the next sailing?

Leaves Harbour	Arrives Island
08:40	10:15
11:05	12:35
14:20	16:00
17:45	19:10

A. 2 hours

B. 2 hours 45 minutes

C. 3 hours

D. 3 hours 15 minutes

E. 6 hours 25 minutes

myfreeschool

Q16. A cyclist rides 36 km in 1 hour 30 minutes at a steady speed. How long does it take to ride 60 km at the same speed?

A. 2 hours

B. 2 hours 15 minutes

C. 2 hours 30 minutes

D. 3 hours

E. 3 hours 30 minutes

Q17. A crowd is reported as 4,500 people, rounded to the nearest 100. What is the largest number of people the crowd could have been?

A. 4,550 B. 4,549 C. 4,499 D. 4,599 E. 4,450

Q18. A driver goes 120 km to a city in 2 hours and returns along the same route in 3 hours. What is the average speed for the whole trip?

A. 40 km/h B. 45 km/h C. 48 km/h D. 50 km/h E. 60 km/h

Q19. A bag of apples costs £a. A bag of pears costs £3 more than a bag of apples. What is the total cost of 2 bags of apples and 1 bag of pears?

A. 2a + 3 B. 3a C. 2a + 3a D. a + 3 E. 3a + 3

Q20. Increase 250 by 12%.

A. 262 B. 270 C. 280 D. 290 E. 300

Q21. Convert 8.4 m to centimetres.

A. 84 cm B. 804 cm C. 840 cm D. 8,400 cm E. 84,000 cm

myfreeschool

Q22. Round 7.995 to 2 decimal places.

A. 7.9 B. 7.99 C. 7.995 D. 8.00 E. 8.01

Q23. In a game Ravi scores −4, then +7, then −9 and finally +2. He finishes on 6 points. How many points did he start with?

A. 2 B. 10 C. 6 D. 14 E. −4

Q24. Priya has 72 red beads and 54 blue beads. She makes identical necklaces using all the beads. What is the greatest number of necklaces she can make?

A. 6 B. 9 C. 12 D. 18 E. 27

Q25. A journey of 130 km is driven at a steady 52 km/h. How long does it take?

A. 2 hours

B. 2 hours 15 minutes

C. 2 hours 30 minutes

D. 2 hours 45 minutes

E. 3 hours

Q26. Four friends agree to share the cost of a present equally. One more friend then joins them, and this makes each person pay £3 less. What does the present cost?

A. £45 B. £75 C. £30 D. £120 E. £60

myfreeschool

Q27. Five pupils score 6, 7, 7, 9 and 11 in a test. Which is larger, the mean or the median, and by how much?

A. The mean, by 1

B. The median, by 1

C. The mean, by 2

D. The median, by 2

E. Neither: they are equal

Q28. What is 4,500 ÷ 1,000?

A. 0.45 B. 4.5 C. 45 D. 450 E. 4,500

Q29. A photograph 15 cm wide and 10 cm tall is enlarged so that its width becomes 24 cm. How tall is the enlarged photograph?

A. 19 cm B. 18 cm C. 14 cm D. 20 cm E. 16 cm

Q30. The angles of a triangle are in the ratio 1 : 2 : 3. What is the largest angle?

A. 30° B. 60° C. 90° D. 120° E. 150°

Q31. A rectangle 8 cm by 5 cm has a rectangle 3 cm by 2 cm cut away from one corner, leaving an L-shape. What is the area of the L-shape?

A. 40 cm² B. 34 cm² C. 46 cm² D. 24 cm² E. 38 cm²

myfreeschool

Q32. What time is shown on this clock?

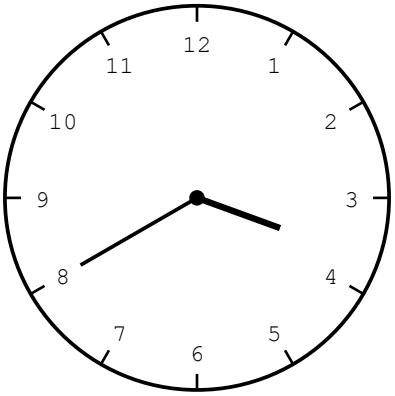

A. 3:08 B. 8:15 C. 3:40 D. 4:40 E. 3:20

Q33. Solve for n.

$$2n - 7 = 9$$

A. 1 B. 4 C. 8 D. 11 E. 16

Q34. One line joins (1, 3) to (7, 3). A second line joins (4, 0) to (4, 8). At which point do the two lines cross?

A. (3, 4) B. (4, 0) C. (1, 8) D. (7, 4) E. (4, 3)

Q35. Which number is between 4.56 and 4.6?

A. 4.58 B. 4.65 C. 4.50 D. 4.62 E. 4.70

Q36. A triangle has an area of 96 cm^2 and a base of 24 cm. What is its height?

A. 4 cm B. 6 cm C. 8 cm D. 12 cm E. 16 cm

Q37. p stands for a negative number and q stands for a positive number. Which of these must be negative?

A. $p + q$ B. $p \times q$ C. $p \times p$ D. $q - p$ E. $p \div p$

myfreeschool

Q38. The table groups the times pupils took to run 100 metres. How many pupils took less than 18 seconds?

Time (seconds)	Number of pupils
12-14	5
15-17	11
18-20	9
21-23	3

A. 5 B. 11 C. 12 D. 14 E. 16

Q39. The four angles of a quadrilateral are 3x, 2x, 4x and 3x. What is the size of its largest angle?

A. 120° B. 90° C. 150° D. 100° E. 60°

Q40. How many prime numbers are there between 30 and 50?

A. 4 B. 5 C. 6 D. 7 E. 8

Q41. Which of these does the same job as increasing an amount by 15%?

A. Multiplying by 1.15

B. Multiplying by 0.15

C. Multiplying by 1.5

D. Adding 0.15

E. Multiplying by 15

Q42. A line passes through (0, 1) and (4, 9). Which point also lies on it?

A. (2, 4) B. (2, 5) C. (6, 12) D. (8, 16) E. (3, 6)

myfreeschool

Q43. Find the missing number in the equation: 0.45 x [?] = 45000

A. 100 B. 1000 C. 10000 D. 100000 E. 1000000

Q44. A cyclist and a walker set off towards each other from two towns 24 km apart. The cyclist travels at 18 km/h and the walker at 6 km/h. How long is it before they meet?

A. 1 hour

B. 1 hour 30 minutes

C. 45 minutes

D. 2 hours

E. 40 minutes

Q45. A recipe for 8 biscuits uses 200 g of butter. How much butter is needed for 20 biscuits?

A. 320 g B. 400 g C. 450 g D. 500 g E. 800 g

Q46. A shopper has £20 and picks up items costing £4.85, £6.20 and £7.40. Which method makes it certain that £20 is enough, without adding the pence?

A. Round every price down to the pound: 4 + 6 + 7 = 17, which is less than 20

B. Round every price up to the next pound: 5 + 7 + 8 = 20, which is not more than 20

C. Round each price to the nearest pound: 5 + 6 + 7 = 18, which is less than 20

D. Add only the pounds and ignore the pence altogether

E. Round the total to the nearest ten pounds

Q47. Sam is 4 years older than Ben. In 6 years' time their ages will add up to 40. How old is Ben now?

A. 12 B. 14 C. 10 D. 16 E. 8

Q48. The ratio of Tom's savings to Sara's savings is 5 : 3. Tom spends £40 and the ratio becomes 3 : 2. How much has Sara saved?

A. £120 B. £160 C. £200 D. £240 E. £400

Q49. If $a = -4$, what is the value of $2a^2 + 5$?

A. −27 B. −11 C. 13 D. 37 E. 69

Q50. Use the departures board. Which flight actually leaves first?

Flight	Scheduled	Delay
FR201	09:35	25 min
EZ118	10:10	1 h 5 min
BA77	11:20	On time
LH44	12:45	40 min

A. FR201

B. EZ118

C. BA77

D. LH44

E. FR201 and EZ118 together

myfreeschool